J185P-AC DATA SHEET

MODEL: J185P-AC with Bayonet Cap

VOLTAGE: 12

DIMENSIONS: Inches (mm)

BATTERY: Flooded/wet lead-acid battery

COLOR: Maroon (case/cover)

MATERIAL: Polypropylene

WATERING SYSTEM: Single-Point Watering Kit

PRODUCT SPECIFICATIONS

BCI GROUP SIZE	TYPE	CAPACITY [A] Minutes		CAPACITY [B] Amp-Hours (AH)				ENERGY (kWh)	TERMINAL Type [E]	DIMENSIONS [C] Inches (mm)			WEIGHT lbs. (kg)
		@25 Amps	@75 Amps	5-Hr Rate	10-Hr Rate	20-Hr Rate	100-Hr Rate	100-Hr Rate		Length	Width	Height [D]	
12 VOLT DEEP CYCLE BATTERY - with T2 TECHNOLOGY™													
921	**J185P-AC***	380	104	168	189	205	226	2.71	6	14.97 (380)	6.91 (176)	14.71 (374)	114 (52)

A. The number of minutes a battery can deliver when discharged at a constant rate at 80°F (27°C) and maintain a voltage above 1.75 V/cell. Capacities are based on peak performance.
B. The amount of amp-hours (AH) a battery can deliver when discharged at a constant rate at 80°F (27°C) for the 20-Hour and 100-Hour rates and 86°F (30°C) for the 5-Hour rate and maintain a voltage above 1.75 V/cell. Capacities are based on peak performance.
C. Dimensions are based on nominal size. Dimensions may vary depending on type of handle or terminal.
D. Dimensions taken from bottom of the battery to the highest point on the battery. Heights may vary depending on type of terminal.
E. Terminal images are representative only.
Trojan's battery testing procedures adhere to both BCI and IEC test standards.

TERMINAL CONFIGURATIONS

6	DT	Automotive Post & Stud Terminal
		Terminal Height Inches (mm) **.79 (20)** *Torque Values in-lb (Nm)* **Bolt: 95 –105 (11 – 12)** **AP: 50 – 70 (6 – 8)** *Bolt Size* **5/16 – 18**

CHARGING INSTRUCTIONS

CHARGER VOLTAGE SETTINGS (AT 77°F/25°C)				
System Voltage	**12V**	**24V**	**36V**	**48V**
Absorption Charge	14.8	29.6	44.4	59.2
Float Charge	13.2	26.4	39.6	52.8
Equalize Charge	15.5	31.0	46.5	62.0

Do not install or charge batteries in a sealed or non-ventilated compartment. Constant under or overcharging will damage the battery and shorten its life as with any battery.

* Polyon™ Case

CHARGING TEMPERATURE COMPENSATION

.028 VPC for every 10°F (5.55°C) above or below 77°F (25°C) (add .028 VPC for every 10°F (5.55°C) below 77°F and subtract .028 VPC for every 10°C above 77°F).

OPERATIONAL DATA

Operating Temperature	Self Discharge
-4°F to 113°F (-20°C to +45°C). At temperatures below 32°F (0°C) maintain a state of charge greater than 60%.	5 – 15% per month depending on storage temperature conditions.

TRJN_J185P-AC_DS_0314

BATTERY DIMENSIONS (shown with DT)

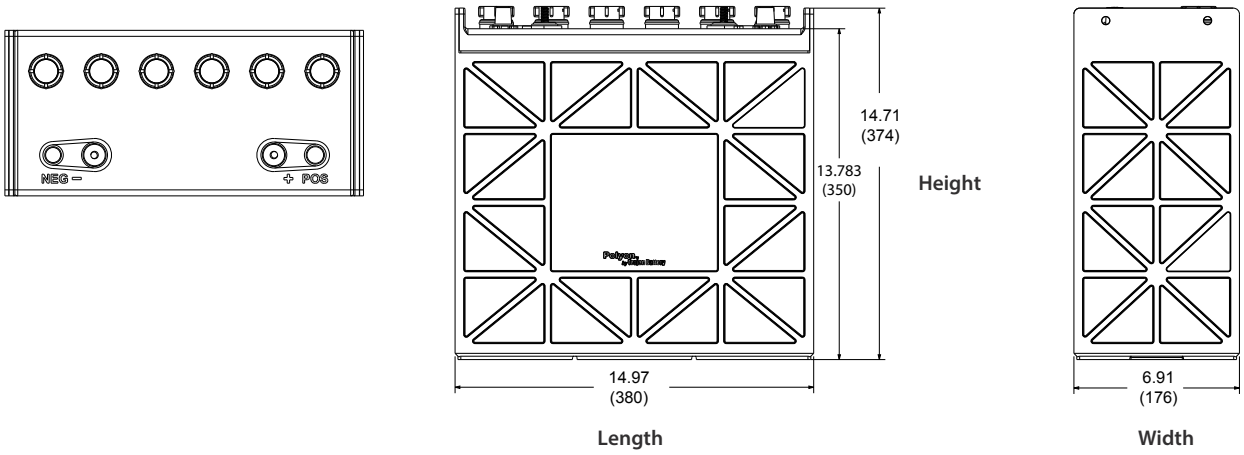

TROJAN J185P-AC PERFORMANCE

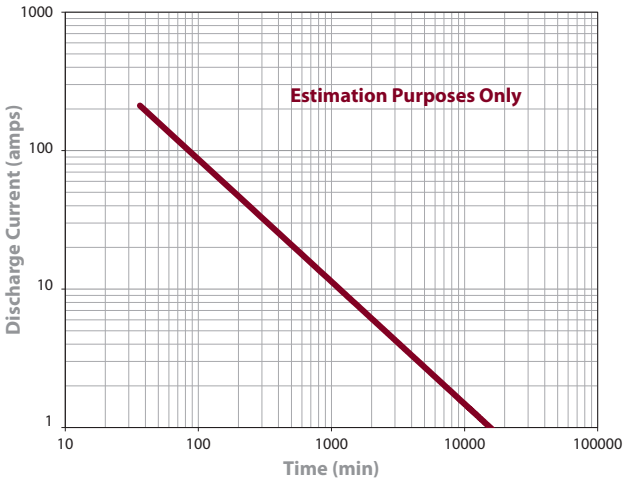

PERCENT CAPACITY VS. TEMPERATURE

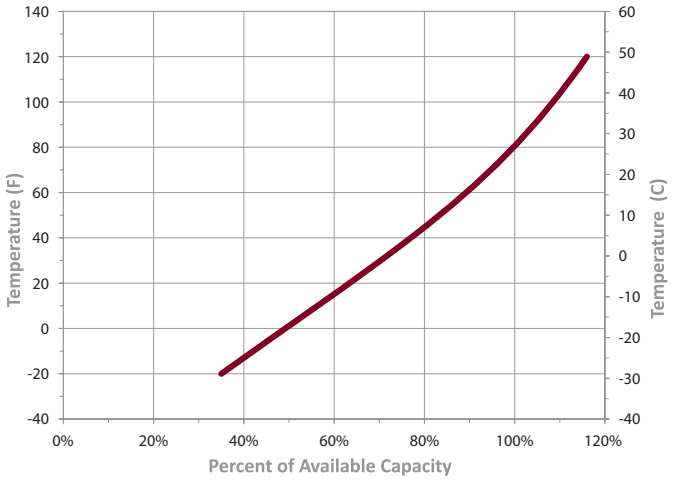

TROJAN BATTERY COMPANY WITH QUALITY SYSTEM CERTIFIED BY DNV = ISO 9001:2008 =

Trojan batteries are available worldwide through Trojan's Master Distributor Network.
We offer outstanding technical support, provided by full-time application engineers.

For a Trojan Master Distributor near you,
call 800.423.6569 or + 1.562.236.3000 or visit www.trojanbattery.com

12380 Clark Street, Santa Fe Springs, CA 90670 • USA

© 2014 Trojan Battery Company. All rights reserved. Trojan Battery Company is not liable for damages that may result from any information provided in or omitted from this publication, under any circumstances. Trojan Battery Company reserves the right to make adjustments to this publication at any time, without notices or obligation. Please check the Trojan Battery website (www.trojanBattery.com) for the most up-to-date information.

TRJN_J185P-AC_DS_0314